9 Maintenance

This chapter describes the maintenance of the module.

Introduction to Maintenance and Repair

The module is designed for easy repair. The most frequent repairs such as piston seal change and purge valve frit change can be done from the front of the module with the module in place in the system stack.

These repairs are described in "Overview of Maintenance and Repair" on page 140.

Warnings and Cautions

WARNING

Toxic, flammable and hazardous solvents, samples and reagents

The handling of solvents, samples and reagents can hold health and safety risks.

→ When working with these substances observe appropriate safety procedures (for example by wearing goggles, safety gloves and protective clothing) as described in the material handling and safety data sheet supplied by the vendor, and follow good laboratory practice.

→ The volume of substances should be reduced to the minimum required for the analysis.

→ Do not operate the instrument in an explosive atmosphere.

WARNING

Electrical shock

Repair work at the module can lead to personal injuries, e.g. shock hazard, when the cover is opened.

→ Do not remove the cover of the module.

→ Only certified persons are authorized to carry out repairs inside the module.

WARNING

Personal injury or damage to the product

Agilent is not responsible for any damages caused, in whole or in part, by improper use of the products, unauthorized alterations, adjustments or modifications to the products, failure to comply with procedures in Agilent product user guides, or use of the products in violation of applicable laws, rules or regulations.

→ Use your Agilent products only in the manner described in the Agilent product user guides.

CAUTION

Safety standards for external equipment

→ If you connect external equipment to the instrument, make sure that you only use accessory units tested and approved according to the safety standards appropriate for the type of external equipment.

Overview of Maintenance and Repair

The following pages describe maintenance (simple repairs) of the pump that can be carried out without opening the main cover.

Table 15 Simple Repair Procedures

Procedure	Typical Frequency	Notes
"Checking and Replacing the Solvent Filter" on page 142	If solvent filter is blocked	Gradient performance problems, intermittent pressure fluctuations
"Exchanging the Passive Inlet Valve (PIV)" on page 143	If internally leaking	Pressure ripple unstable, run **Leak Rate Test** for verification
"Exchanging the Outlet Valve" on page 145	If internally leaking	Pressure ripple unstable, run **Leak Rate Test** for verification
"Exchanging the Purge Valve Frit" on page 147	If internally leaking	Solvent dripping out of waste outlet when valve closed
"Exchanging the Purge Valve Frit" on page 147	If the frit shows indication of contamination or blockage	A pressure drop of > 10 bar across the frit (at a water flow of 5 mL/min with open purge valve) indicates blockage
"Maintenance of a Pump Head Without Seal Wash Option" on page 151	If pump performance indicates seal wear	Leaks at lower pump head side, unstable retention times, pressure ripple unstable — run **Leak Rate Test** for verification
Exchanging pistons, see "Maintenance of a Pump Head Without Seal Wash Option" on page 151	If scratched	Seal life time shorter than usual — check pistons while changing the seals
"Exchanging the Optional Interface Board" on page 164	If defective	Error condition, indicated by red status indicator

Cleaning the Module

To keep the module case clean, use a soft cloth slightly dampened with water, or a solution of water and mild detergent.

WARNING **Liquid dripping into the electronic compartment of your module can cause shock hazard and damage the module**

- Do not use an excessively damp cloth during cleaning.
- Drain all solvent lines before opening any connections in the flow path.

Checking and Replacing the Solvent Filter

A functional solvent filter is essential for a good pump performance and for protecting the LC system.

When If solvent filter is blocked.

Parts required

p/n	Description
5041-2168	Solvent inlet filter, 20 µm pore size

See "Bottle Head Assembly" on page 183 for related parts.

CAUTION

Small particles can permanently block the capillaries and valves of the module.

Damage of the module.

→ Always filter solvents.

→ Never use the module without solvent inlet filter.

NOTE

If the filter is in good condition the solvent will freely drip out of the solvent tube (hydrostatic pressure). If the solvent filter is partly blocked only very little solvent will drip out of the solvent tube.

1 Remove the solvent filter from the inlet filter adapter and replace it by a new one.

Exchanging the Passive Inlet Valve (PIV)

When	If internally leaking (backflow)	
Tools required	**Description**	
	Wrench, 14 mm	
	Pair of tweezers	
Parts required	**p/n**	**Description**
	G1312-60066	Passive inlet valve 1220/1260
Preparations	Remove the front cover.	

1 Disconnect the solvent inlet tube from the inlet valve (be aware that solvent may leak out of the tube due to hydrostatic flow).

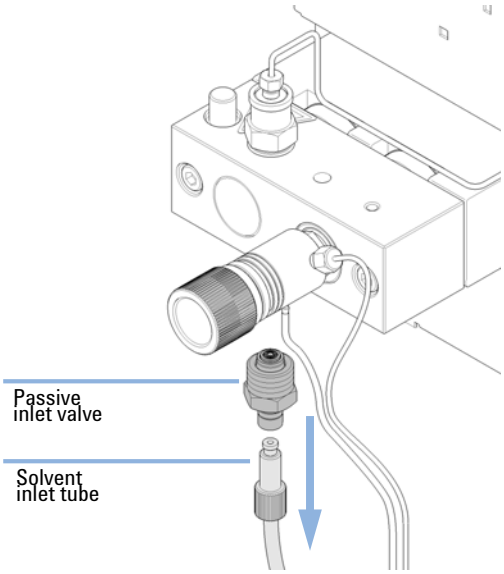

2 Using a 14 mm wrench loosen the passive inlet valve and remove the valve from the pump head.

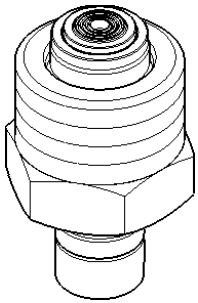

3 Insert the new valve into the pump head and tighten the valve using a torque wrench (12 Nm).

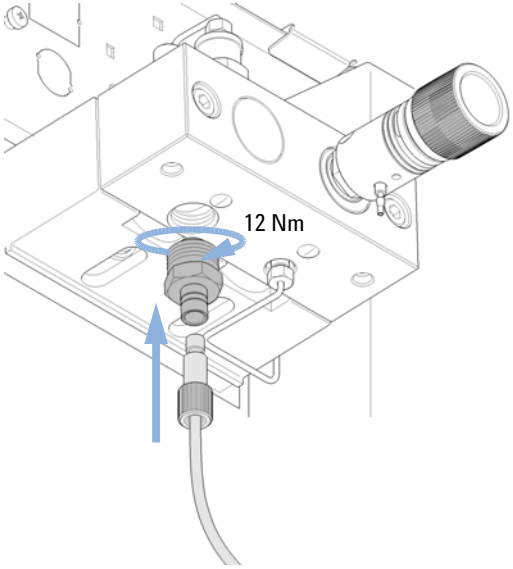

Next Steps:

4 Reconnect the solvent inlet tube to the passive inlet valve.

5 Reinstall the front cover.

Exchanging the Outlet Valve

When	If internally leaking	
Tools required	**p/n**	**Description**
	8710-0510	Wrench open 1/4 — 5/16 inch
	8710-1924	Wrench open 14 mm
Parts required	**p/n**	**Description**
	G1312-60067	Outlet valve 1220/1260

Preparations

- Switch off pump at the main power switch
- Remove the front cover

1 Using a 1/4 inch wrench disconnect the valve capillary from the outlet valve. Using the 14 mm wrench loosen the valve and remove it from the pump body.

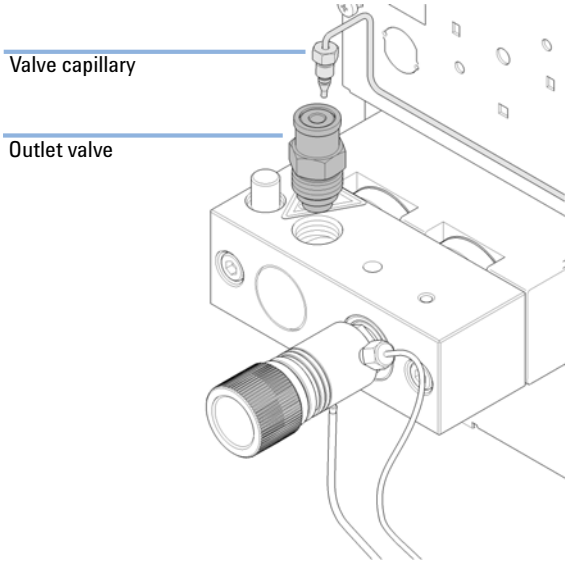

2 Do not disassemble the outlet valve, as this can damage the valve.

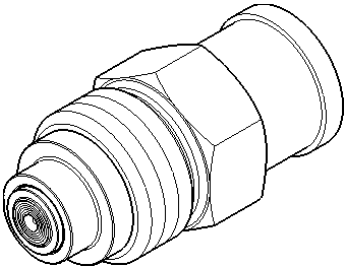

3 Reinstall the outlet valve and tighten the valve using a torque wrench (12 Nm). Reconnect the valve capillary. 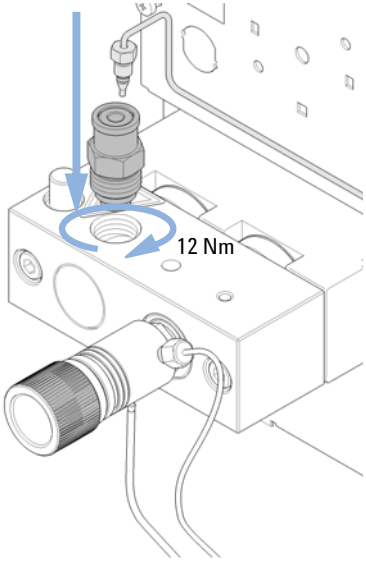	

Exchanging the Purge Valve Frit

When

- Frit – when piston seals are exchanged or when contaminated or blocked (pressure drop of > 10 bar across the frit at a flow rate of 5 mL/min of water with purge valve opened)
- Purge valve – if internally leaking

Tools required

p/n	Description
8710-0510	Wrench open 1/4 — 5/16 inch
8710-1924	Wrench open 14 mm
	Pair of tweezers
OR	Toothpick

Parts required

#	p/n	Description
1	01018-22707	PTFE frits (pack of 5)
1	G1312-60061	Purge valve 1260
1	5067-4728	Seal cap (OPTIONAL)

Preparations

- Switch off pump at the main power switch
- Remove the front cover
- Use an optional solvent shutoff valve or lift up solvent filters in solvent reservoirs for avoiding leakages.

1 Using a 1/4 inch wrench disconnect the pump outlet capillary from the purge valve.

2 Disconnect the waste tube. Beware of leaking solvents due to hydrostatic pressure.

3 Using the 14 mm wrench unscrew the purge valve and remove it.

4 Remove the seal cap from the purge valve.

5 Using a pair of tweezers or a toothpick remove the frit.

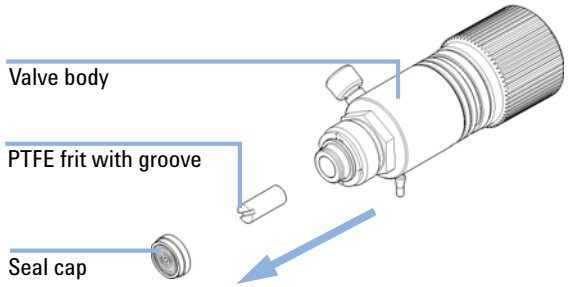

6 Place a new frit into the purge valve with the orientation of the frit as shown below (slit in frit points to the front). Reinstall the seal cap including the gold seal.

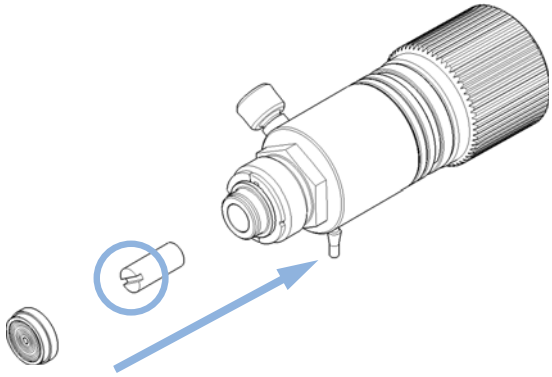

NOTE

Before reinstallation always check the gold seal in the seal cap. A deformed seal cap should be exchanged.

7 Insert the purge valve into the pump head and locate the pump outlet capillary and the waste tube.

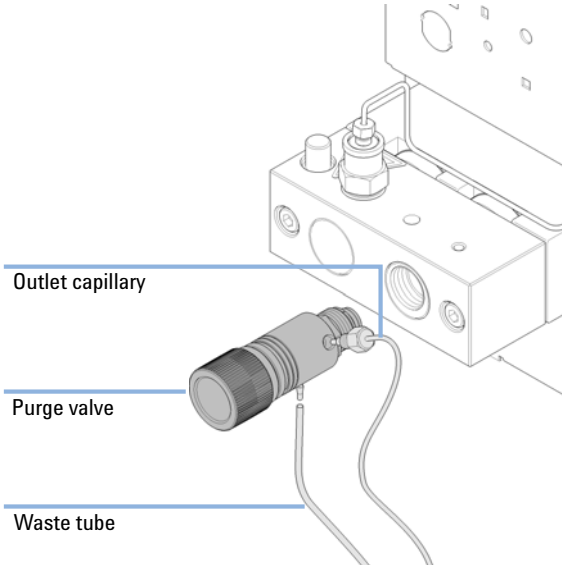

8 Tighten the purge valve and reconnect outlet capillary and waste tubing.

Removing the Pump Head Assembly

When

- Exchanging the seals
- Exchanging the pistons
- Exchanging seals of the seal wash function

Tools required

p/n	Description
8710-0510	Wrench open 1/4 — 5/16 inch
8710-2392	Hexagonal key, 4.0 mm, 15 cm long, T-handle

Preparations

- Switch off pump at the main power switch and unplug the power cable.
- Use an optional solvent shutoff valve or lift up solvent filters in solvent reservoirs for avoiding leakages.

CAUTION

Damage of the pump drive

Starting the pump when the pump head is removed may damage the pump drive.

→ Never start the pump when the pump head is removed.

1 Remove the front cover by pressing the clip fasteners on both sides of the cover. 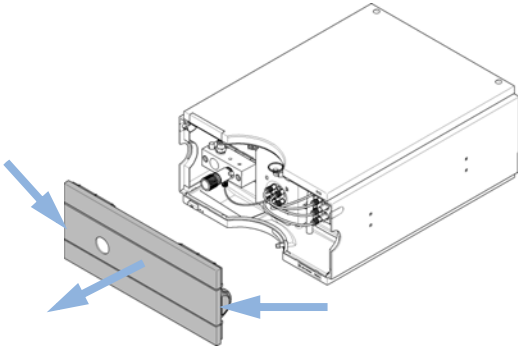	**2** If an active inlet valve is installed, disconnect the active inlet valve cable.

3 Using a 1/4 inch wrench remove the outlet capillary. 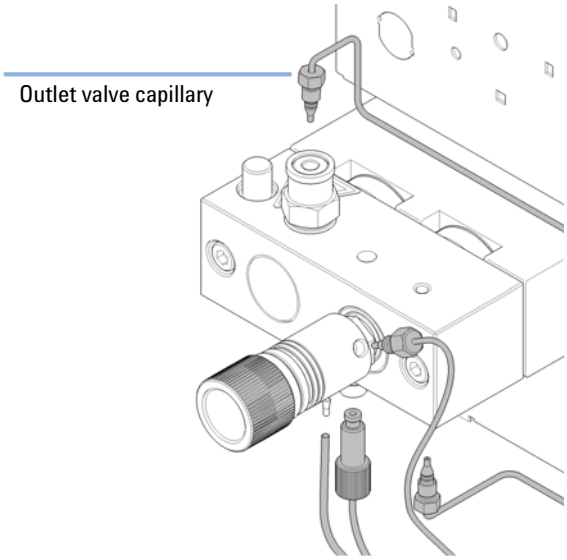 	**4** Disconnect the capillary from the outlet valve. **5** Remove the waste tubing and disconnect the solvent tubing from the inlet valve. **6** If applicable, remove tubings from the seal wash support rings. **7** Remove the capillary at the bottom of the pump head.
8 Using a 4 mm hexagonal key, stepwise loosen the two pump head screws and remove the pump head from the pump drive. 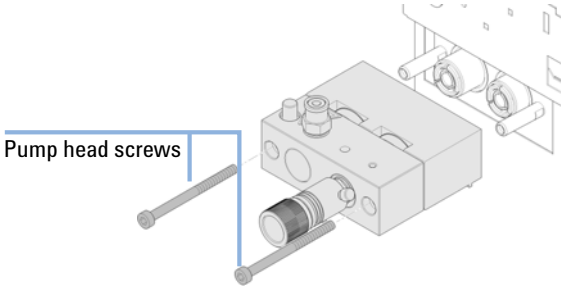 	

Maintenance of a Pump Head Without Seal Wash Option

When

In case of maintenance or pump head internal leaks.

Tools required

Description
Wrench 1/4 inch
Hexagonal key, 4 mm

Parts required

	#	p/n	Description
	1	01018-23702	Insert tool
	1	5063-6589	Piston seal PTFE, carbon filled, black (pack of 2), default
OR	1	0905-1420	PE seals (pack of 2)
	1	5063-6586	Sapphire piston

For a complete list of parts see "Pump Head Assembly Without Seal Wash" on page 172.

Preparations

- Switch off pump at the main power switch
- Remove the front cover
- "Removing the Pump Head Assembly" on page 149

1 Place the pump head on a flat surface. Loosen the lock screw (two turns) and while holding the lower half of the assembly (piston housing) carefully pull the pump housing away from the piston housing.

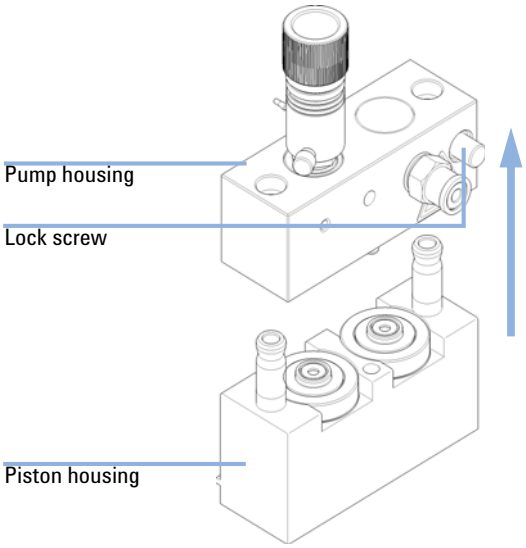

2 Remove the support rings from the piston housing and lift the housing away from the pistons.

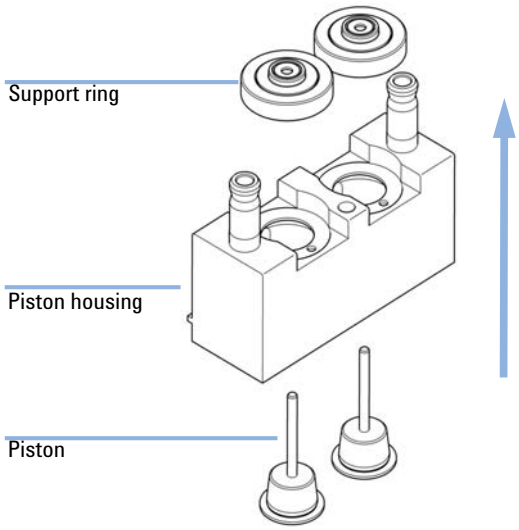

3 Check the piston surface and remove any deposits or layers. Cleaning can be done with alcohol or tooth paste. Replace piston if scratched.

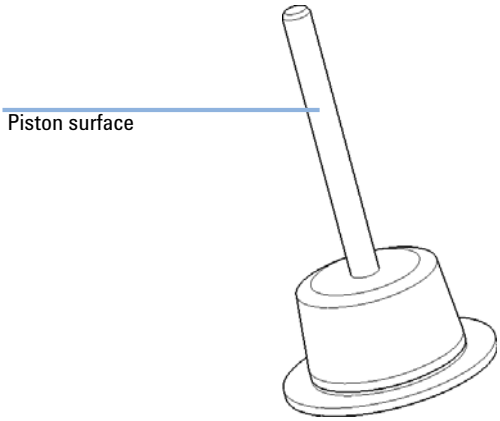

4 Using the steel side of the insert tool carefully remove the seal from the pump housing. Remove wear retainers, if still present.

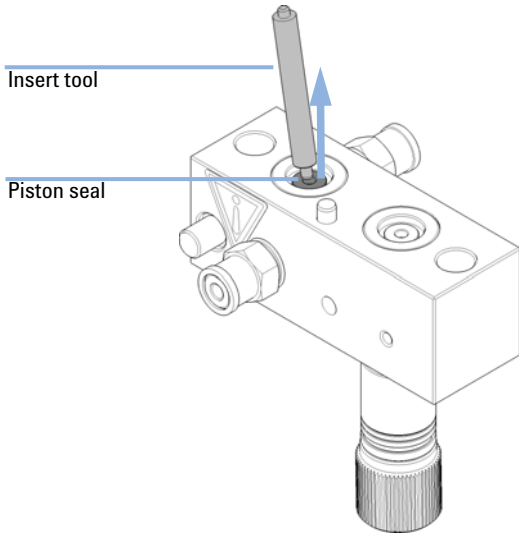

5 Using the plastic side of the insert tool, insert new seals into the pump head.

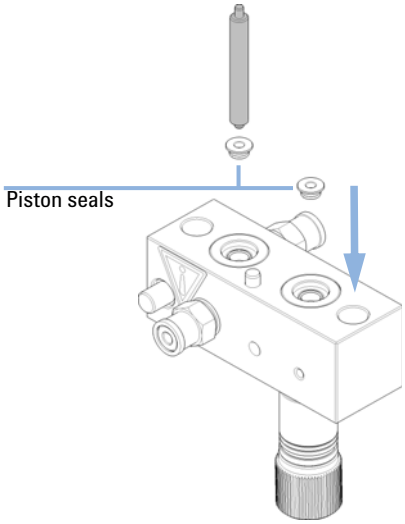

6 Reassemble the pump head assembly. Note the correct position of the pin on the support ring.

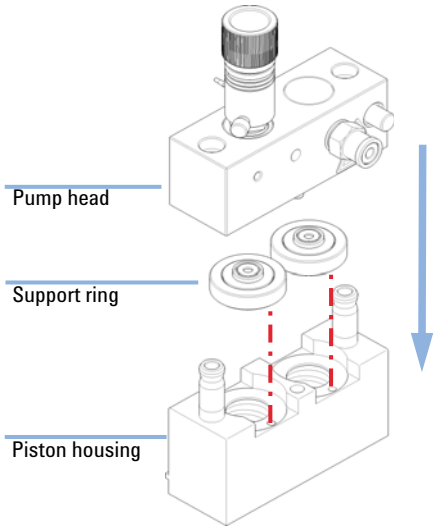

7 Insert the pistons and carefully press them into the seals.

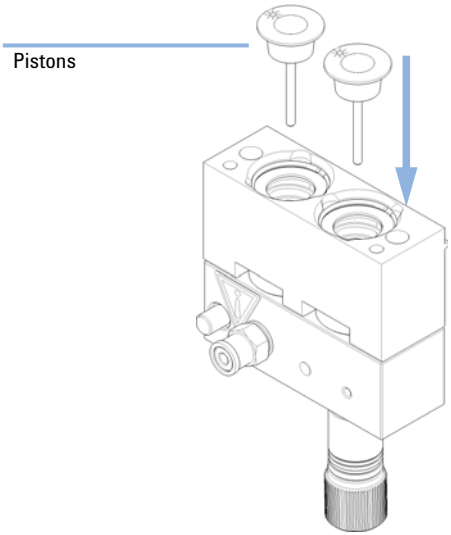

8 Tighten the lock screw.

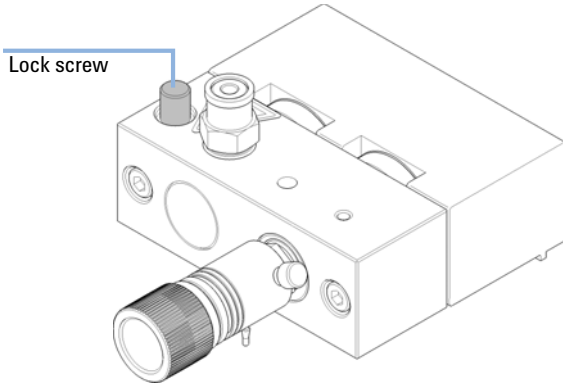

Next Steps:

9 If a standard seal has been installed, run the seal wear-in procedure, see "Seal Wear-in Procedure" on page 160, which includes a replacement of the purge valve frit.

10 For the normal phase seal, the purge valve frit should be replaced, see "Exchanging the Purge Valve Frit" on page 147.

Maintenance of a Pump Head with Seal Wash Option

Tools required	p/n	Description
	8710-2392	Hex key 4 mm15 cm long T-handle

Parts required	#	p/n	Description
	1	01018-23702	Insert tool
	1	0905-1175	Wash seal (PTFE)
	1	5062-2484	Gasket, seal wash (pack of 6)
	1	5063-6589	Piston seal PTFE, carbon filled, black (pack of 2), default
OR	1	0905-1420	PE seals (pack of 2)
	1	5063-6586	Sapphire piston

For a complete list of pump head parts, please see "Pump Head Assembly with Seal Wash Option" on page 174.

Preparations

- Switch off pump at the main power switch
- Remove the front cover
- Use an optional solvent shutoff valve or lift up solvent filters for avoiding leakages
- Remove the pump head, see "Removing the Pump Head Assembly" on page 149
- Remove the wash solvent tubings from the support ring inlet and outlet

1 Remove the seal holder and the seal wash support rings from the piston housing. Remove the seal holder from the support ring assembly.

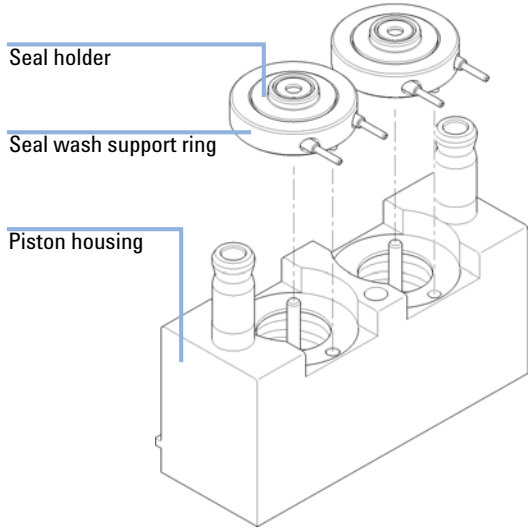

2 Check the piston surface and remove any deposits or layers. Cleaning can be done with alcohol or tooth paste. Replace piston if scratched.

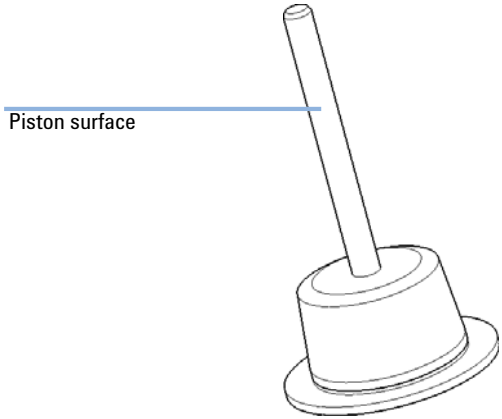

3 Using the steel side of the insert tool carefully remove the seal from the pump housing. Remove wear retainers, if still present.

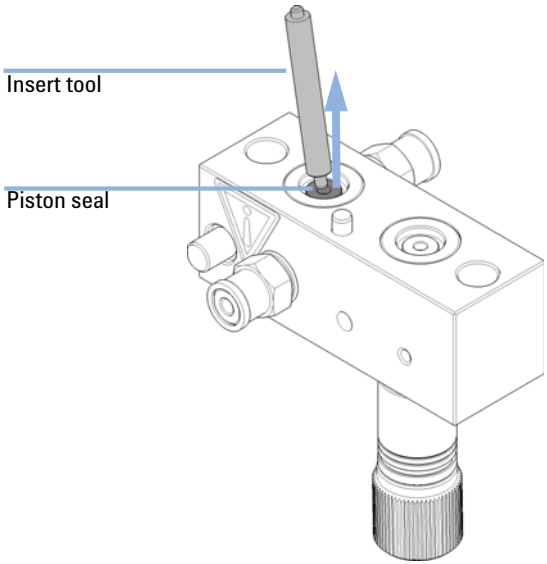

4 Using the plastic side of the insert tool, insert new seals into the pump head.

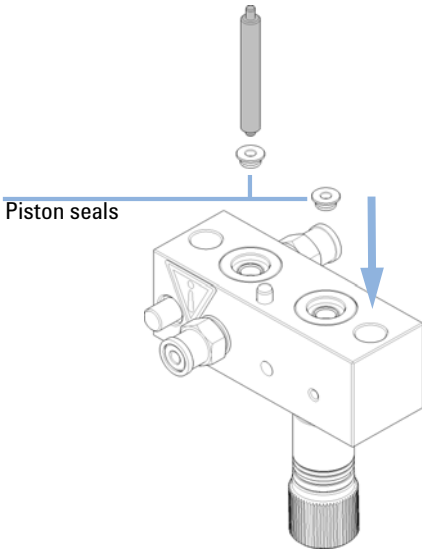

5 Using the steel side of the insert tool remove the seal wash gasket and the wash seal from the support ring. The removed seal will be damaged and cannot be re-used!

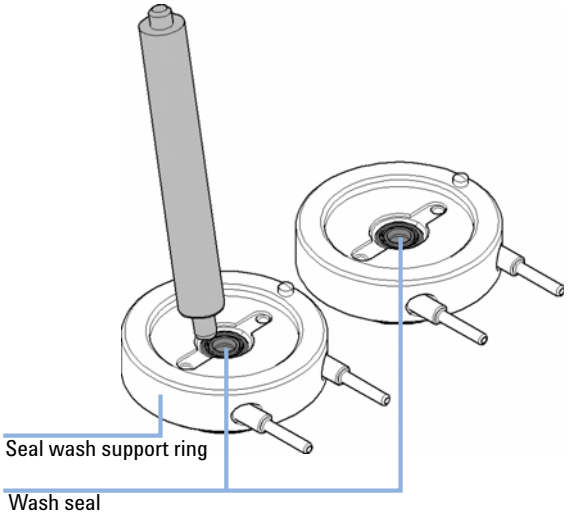

6 Using the plastic side of the insert tool press the new wash seal (spring pointing upwards) into the recess of the support ring.

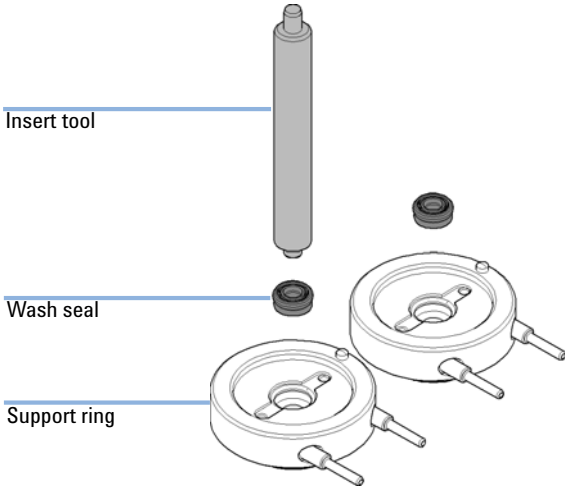

7 Place a seal wash gasket in the recess of the support ring. Put the seal holder on top of the gasket.

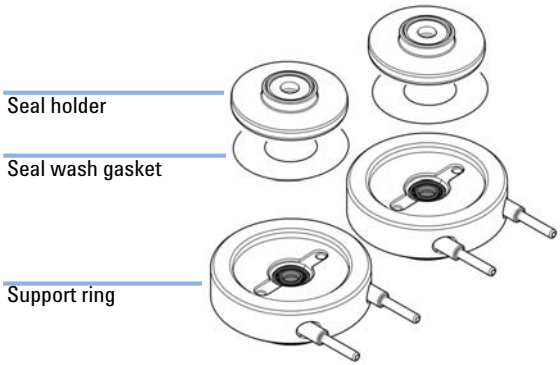

8 Place the support rings on the piston housing (pistons not installed) and snap the pump head and piston housing together. Note the correct position of the pin on the support ring.

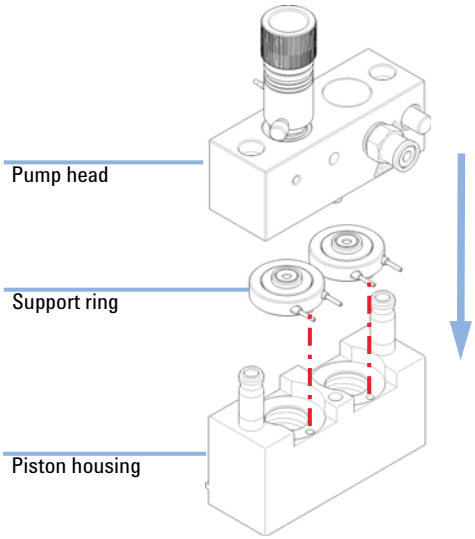

9 Insert the pistons and carefully press them into the seals. 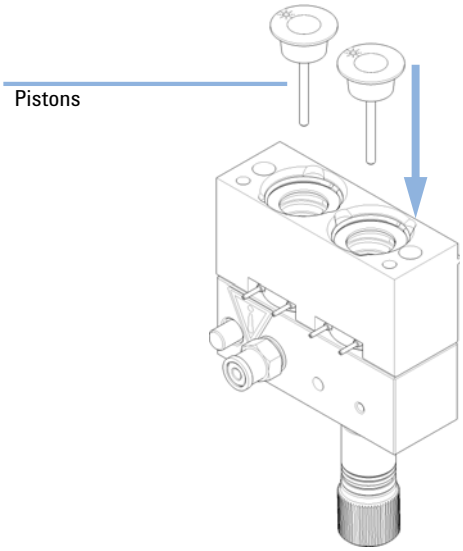 	**10** Tighten the lock screw. 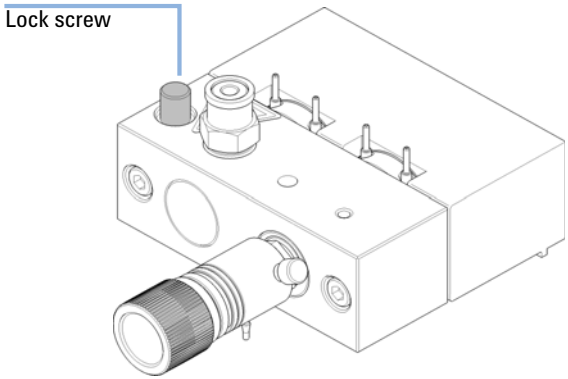

Reinstalling the Pump Head Assembly

When	When reassembling the pump		
Tools required	**p/n**	**Description**	
	8710-2392	Hex key 4 mm15 cm long T-handle	
Parts required	**#**	**p/n**	**Description**
	1	79846-65501	Pump head grease

1 If needed, apply a small amount of grease on the back of the screws. Normally, the grease added during manufacturing is sufficient for a long time.	**2** Slide the pump head assembly onto the pump drive and use a 4 mm hexagonal key to tighten the pump head screws stepwise with increasing torque (max. 5 Nm). 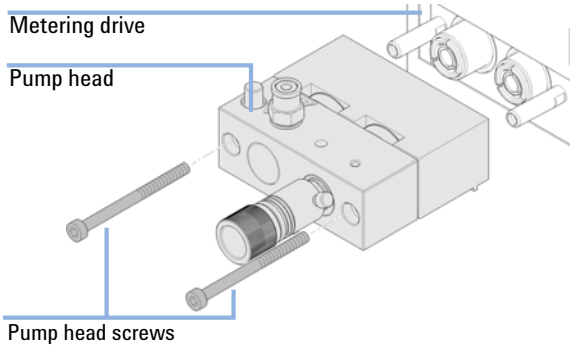

3 Reconnect all capillaries, tubes and (if installed) the active inlet valve cable to its connector. 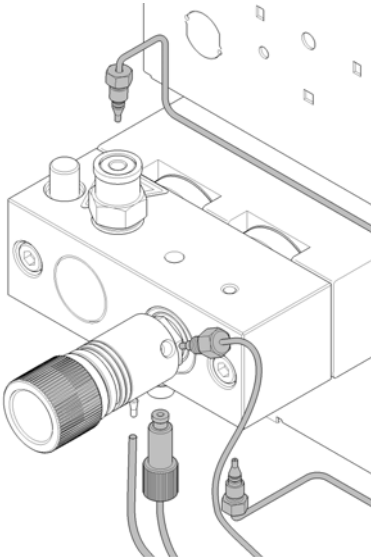	**4** Reinstall the front cover.

Seal Wear-in Procedure

Parts required	p/n	Description
	0100-1847	Adapter AIV to solvent inlet tubes
	5022-2159	Restriction capillary

CAUTION

Seal damage

This procedure is required for black PTFE seals (standard applications, p/n 5063-6589), but it will damage the yellow PE seals (normal phase applications, p/n 0905-1420).

→ Do not run the seal wear-in procedure if PE seals are installed in the pumphead.

NOTE

Before replacing your solvent by isopropanol or replacing isopropanol by your solvent, consider solvent miscibility. For example, do not directly switch from buffers to isopropanol and vice versa.

1. Place a bottle with 100 mL of isopropanol in the solvent cabinet and put a tubing (including bottle head assembly) into the bottle.
2. If an active inlet valve is installed, screw the PEEK adapter 1/4-28 to 10-32 (0100-1847) to the AIV and connect the inlet tube from the bottle head directly to it.
3. Connect the Restriction capillary (5022-2159) to the purge valve. Connect its other end to a waste container.
4. Open the purge valve and purge the system for 5 min with isopropanol at a flow rate of 2 mL/min.
5. Close the purge valve and set the flow to a rate adequate to achieve a pressure of 350 bar. Pump 15 min at this pressure to wear in the seals. The pressure can be monitored using your instrument control software or tool.
6. Turn OFF the pump, slowly open the purge valve to release the pressure from the system, disconnect the restriction capillary and reinstall the bottle with the solvent for your application.
7. Rinse your system with the solvent used for your next application.
8. Replace the purge valve frit, see “Exchanging the Purge Valve Frit” on page 147.

Exchanging the Multi-Channel Gradient Valve (MCGV)

(Quaternary pump only)

Tools required	**p/n**	**Description**
	8710-0899	Screwdriver, Pozidriv #1

Parts required	**p/n**	**Description**
	G1311-67701	Multi channel gradient valve (MCGV)

Preparations

- Switch off pump at the main power switch
- Remove the front cover
- Use an optional solvent shutoff valve or lift up solvent filters in solvent reservoirs for avoiding leakages.

NOTE

The life time of the multi-channel gradient valve can be increased by regularly flushing the valve, especially when using buffers. If using buffers, flush all channels of the valve with water to prevent precipitation of the buffer, otherwise salt crystals could drop into an unused channel and form plugs that may cause leaks of that channel. Such leaks will interfere with the general performance of the valve. When using buffers in combination with organic solvents in the Agilent 1260 Infinity Quaternary Pump it is recommended to connect the aequous solutions/buffers to one of the bottom ports (A and D) and the organic solvent to one of the upper gradient valve ports. It is best to have the organic channel directly above the buffer channel (e.g., A - buffer, B - organic solvent).

1 Disconnect the connecting tube, waste tube and the solvent tubes from the MCGV.

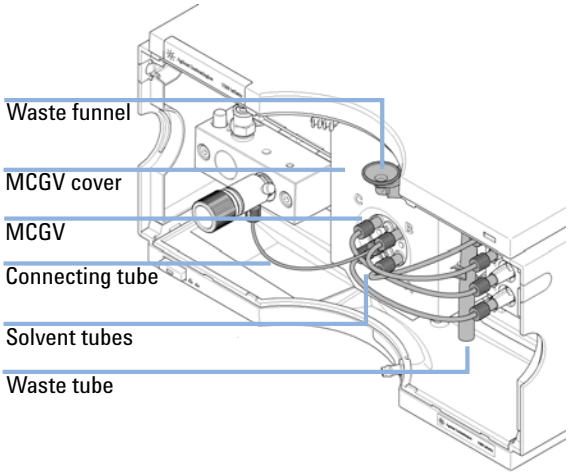

2 Press the lower sides of the cover to unclip it. Remove the cover.

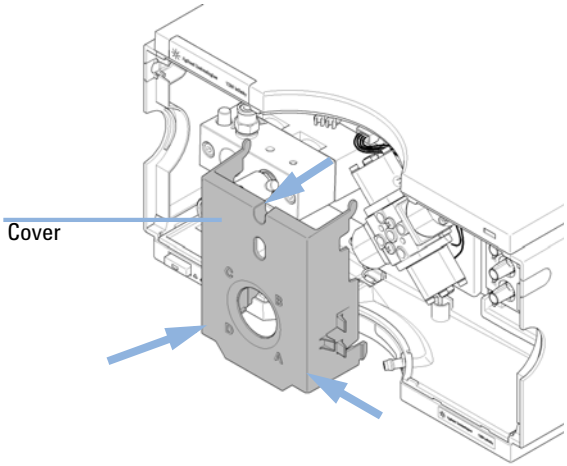

3 Disconnect the MCGV cable, unscrew the two screws and remove the valve.

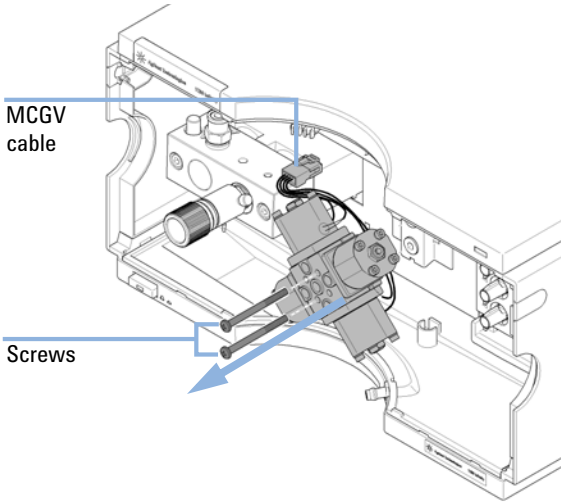

4 Place the new MCGV into position. Make sure that channel A of the MCGV is put at the bottom-right position. Tighten the two screws and connect the cable to its connector.

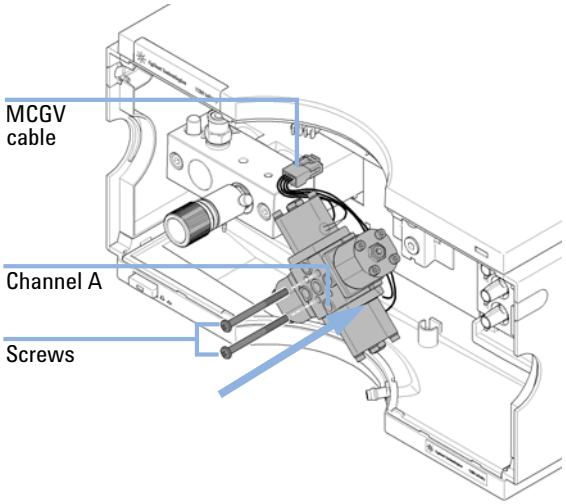

5 Install the MCGV cover.

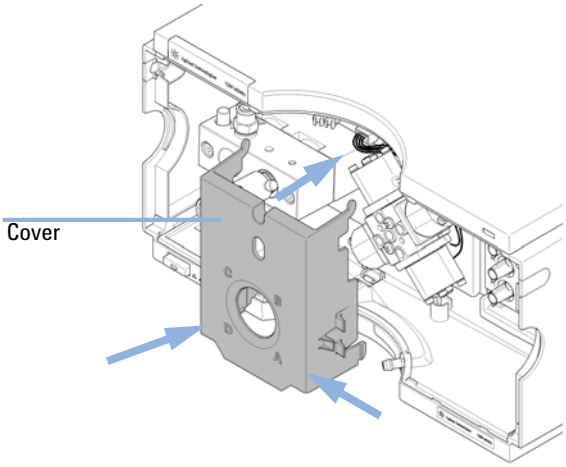

6 Reconnect the waste funnel with the waste tube holder in the top cover. Insert waste tube in the holder in the leak pan and clip tube to the MCGV cover.

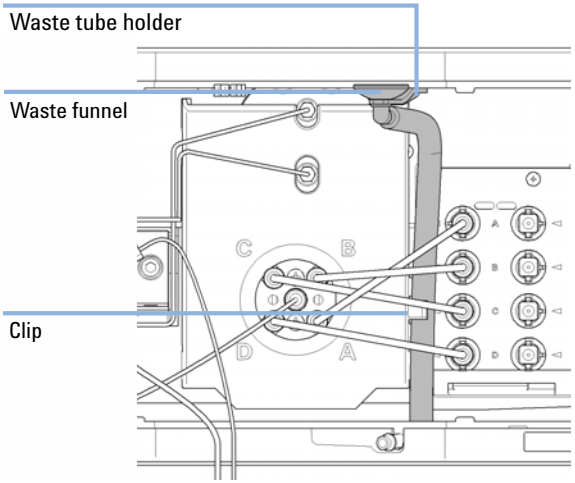

7 Reconnect the tube from the inlet valve to the middle position of the MCGV. Connect solvent tubes for channels A-D from the MCGV to the degasser outlets.

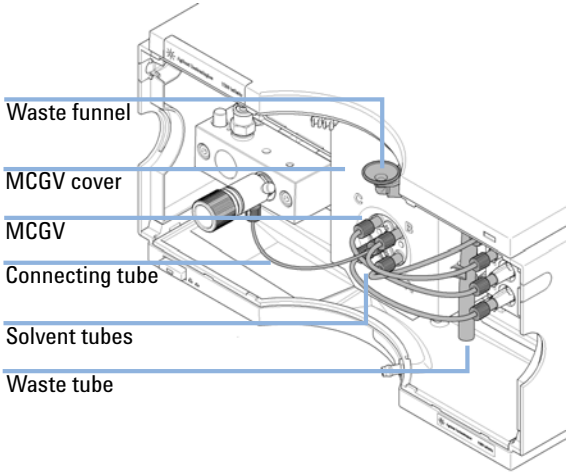

Exchanging the Optional Interface Board

When Board defective

Parts required

#	p/n	Description
1	G1351-68701	Interface board (BCD) with external contacts and BCD outputs

CAUTION Electronic boards are sensitive to electrostatic discharge (ESD) and should be handled with care so as not to damage them. Touching electronic boards and components can cause electrostatic discharge.

ESD can damage electronic boards and components.

→ Be sure to hold the board by the edges and do not touch the electrical components. Always use an ESD protection (for example, an ESD wrist strap) when handling electronic boards and components.

1 Switch off the pump at the main power switch, unplug the pump from line power.

2 Disconnect cables from the interface board connectors.

3 Loosen the screws. Slide out the interface board from the pump.

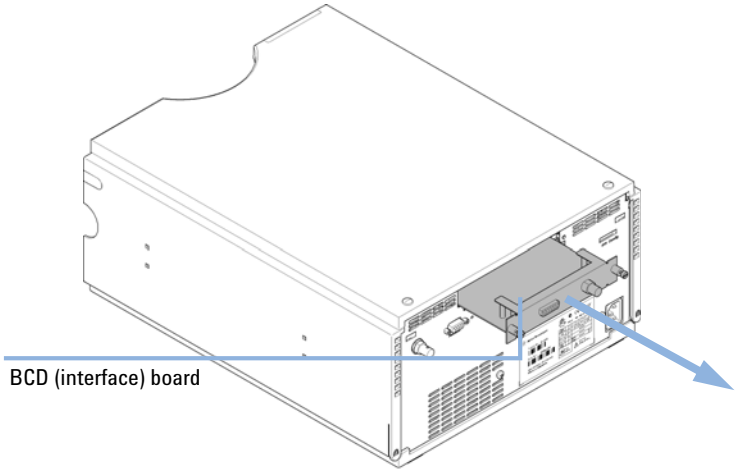

Figure 15 Exchanging the Interface Board

4 Install the new interface board. Secure screws.

5 Reconnect the cables to the board connector.

6 Reconnect the pump to line power.

Exchanging the Active Inlet Valve (AIV) or its Cartridge

When

If internally leaking (backflow)

Tools required

Description
Wrench, 14 mm
Pair of tweezers

Parts required

#	p/n	Description
1	G5699A	Active Inlet Valve Upgrade Kit includes service and the parts listed below
1	G1312-60025	Active inlet valve body, without cartridge
1	G1312-60020	Cartridge for active inlet valve 600 bar
1	G1311-67304	Connecting tube, MCGV to AIV (needed for quaternary pump only)
1	0100-2298	Adapter, PEEK int. 1/4-28 to ext. 10-32 (needed for isocratic pump only)

Preparations

- Switch off pump at the main power switch and unplug the power cable.
- Use an optional solvent shutoff valve or lift up solvent filters in solvent reservoirs for avoiding leakages.

NOTE The active inlet valve can be installed for highest method backward compatibility or special applications.

NOTE By default, 1260 Infinity pumps do not have an active inlet valve. If an AIV shall be installed, please contact your Agilent service representative.

1. Remove the front cover.
2. Unplug the active inlet valve cable from the connector.
3. Disconnect the solvent inlet tube from the inlet valve (be aware that solvent may leak out of the tube due to hydrostatic flow).
4. Unscrew the adapter from the active inlet valve.

5 Using a 14 mm wrench loosen the active inlet valve and remove the valve from the pump head.

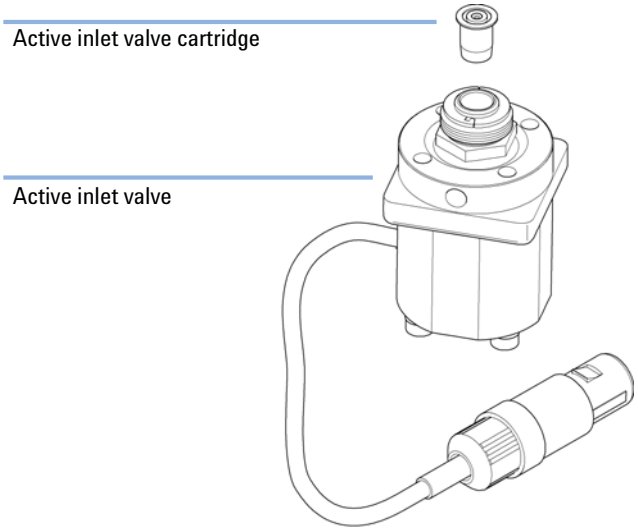

Figure 16 Active Inlet Valve Assembly

6 Using a pair of tweezers remove the valve cartridge from the actuator assembly.

7 Before inserting the new valve cartridge clean the area in the actuator assembly. Flush the cartridge area thoroughly with alcohol.

8 Insert a new cartridge into the actuator assembly (make sure the valve cartridge is completely inserted into the actuator assembly).

9 Insert the new valve into the pump head. Using the 14 mm wrench turn the nut until it is hand tight.

10 Position the valve such that the solvent inlet tube connection points towards the front.

11 Using the 14 mm wrench tighten the nut by turning the valve into its final position (not more than a quarter turn).

12 Reconnect the adapter at the active inlet valve.

13 Reconnect the solvent inlet tube to the adapter. Reconnect the active inlet valve cable to the connector in the Z-panel.

14 Reinstall the front cover.

15 Purge the system with 30 mL of solvent in order to achieve a low pressure ripple, see “Regular Priming” on page 56.

Exchanging the Seal Wash Cartridge

Parts required	p/n	Description
	5067-4793	Peristaltic Pump with Fixation Springs

Preparations

- Switch off pump at the main power switch
- Remove the front cover

1 Remove the wash solvent tubings from the support ring inlet and outlet. 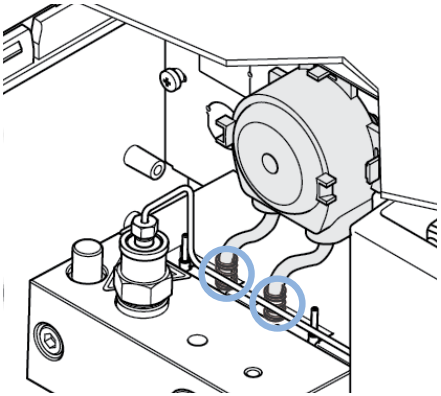	**2** Unclip the peristaltic pump cartridge from the module housing and remove it. 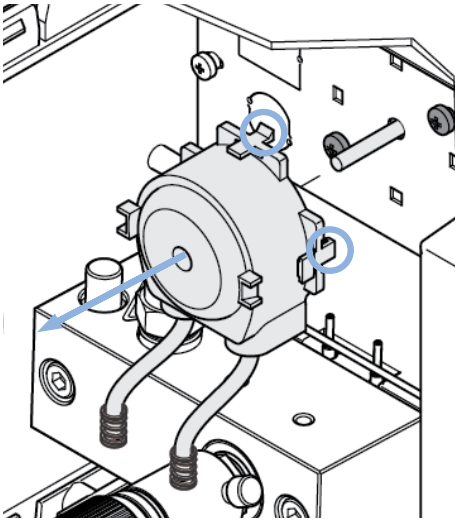

3 Put the new peristaltic pump cartridge onto the rod of the pump motor and push the plastic clips into the module housing. 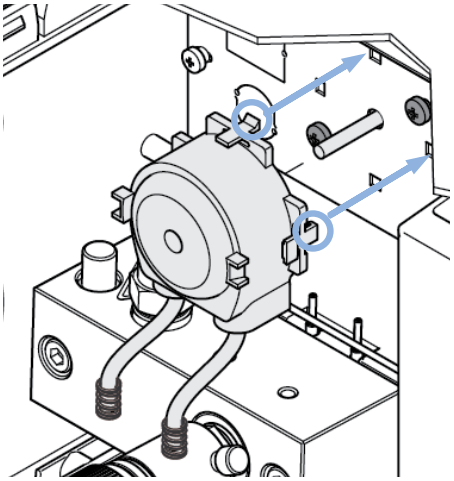	**4** Connect the peristaltic pump tubes to the middle nozzles of the support rings. Connect the left nozzle to the wash solvent reservoir and the right one to the waste container. 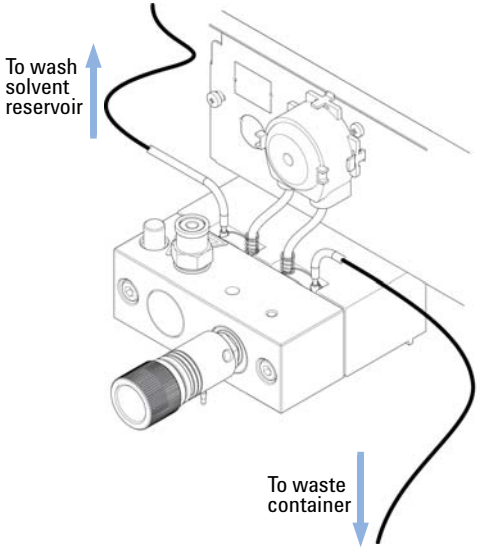

Replacing the Module Firmware

When

The installation of newer firmware might be necessary
- if a newer version solves problems of older versions or
- to keep all systems on the same (validated) revision.

The installation of older firmware might be necessary
- to keep all systems on the same (validated) revision or
- if a new module with newer firmware is added to a system or
- if third party control software requires a special version.

Tools required

	Description
	LAN/RS-232 Firmware Update Tool
OR	Agilent Lab Advisor software
OR	Instant Pilot G4208A (only if supported by module)

Parts required

#	Description
1	Firmware, tools and documentation from Agilent web site

Preparations

Read update documentation provided with the Firmware Update Tool.

To upgrade/downgrade the module's firmware carry out the following steps:

1 Download the required module firmware, the latest LAN/RS-232 FW Update Tool and the documentation from the Agilent web.
   - http://www.chem.agilent.com/_layouts/agilent/downloadFirmware.aspx?whid=69761

2 For loading the firmware into the module follow the instructions in the documentation.

Module Specific Information

There is no specific information for this module.

10
Parts for Maintenance

This chapter provides information on parts for maintenance.

Pump Head Assembly Without Seal Wash

Item	p/n	Description
	G1312-60056	Pump Head 1200 SL without Seal Wash
1	5063-6586	Sapphire piston
2	G1311-60002	Piston housing
3	5067-1560	Support Ring SL, no seal wash
4	5062-2484	Gasket, seal wash (pack of 6)
5	5042-8952	Seal holder
6	5063-6589	Piston seal PTFE, carbon filled, black (pack of 2), default
OR	0905-1420	PE seals (pack of 2)
7	G1311-25200	Pump chamber housing
8	G1312-60066	Passive inlet valve 1220/1260
	G1312-60025	Active inlet valve body, without cartridge (OPTIONAL)
	G1312-60020	Cartridge for active inlet valve 600 bar (OPTIONAL)
9	G1312-60067	Outlet valve 1220/1260
10	5042-1303	Lock screw
11	G1312-60061	Purge valve 1260
12	0515-2118	Pump head screw (M5, 60 mm)

The Pump Head 1200 SL without Seal Wash (G1312-60056) includes items 1-7, 10 and 12.

For piston seals, see “Choosing the Right Pump Seals” on page 87.

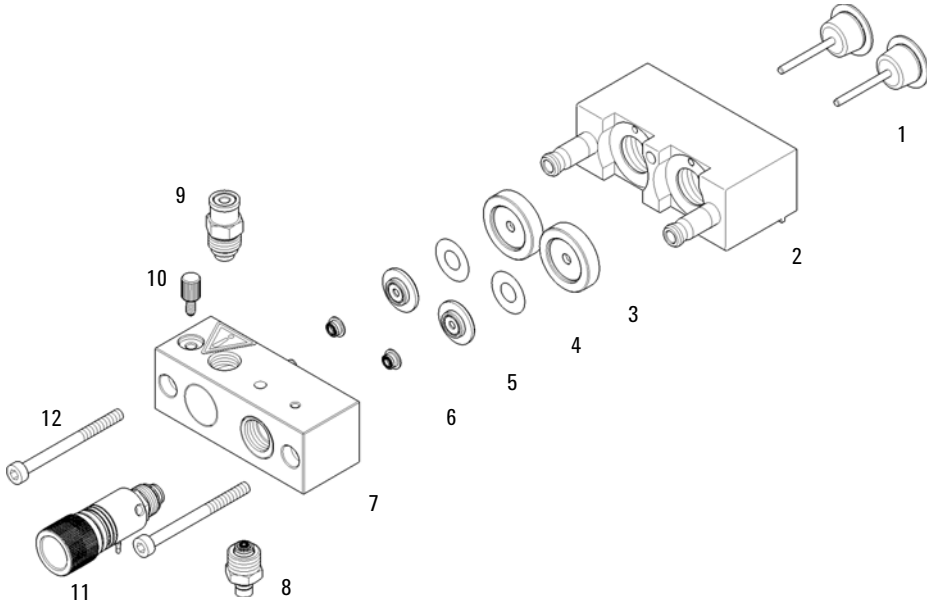

Figure 17 Pump head assembly without seal wash option

Pump Head Assembly with Seal Wash Option

Item		p/n	Description
		G1312-60045	Pump head assembly with seal wash
	1	5063-6586	Sapphire piston
	2	G1311-60002	Piston housing
	3	01018-60027	Support ring seal wash
	4	0905-1175	Wash seal (PTFE)
OR		0905-1718	Wash Seal PE
	5	5062-2484	Gasket, seal wash (pack of 6)
	6	5042-8952	Seal holder
	7	5063-6589	Piston seal PTFE, carbon filled, black (pack of 2), default
OR		0905-1420	PE seals (pack of 2)
	8	G1311-25200	Pump chamber housing
	9	G1312-60066	Passive inlet valve 1220/1260
		G1312-60025	Active inlet valve body, without cartridge (OPTIONAL)
		G1312-60020	Cartridge for active inlet valve 600 bar (OPTIONAL)
	10	G1312-60067	Outlet valve 1220/1260
	11	5042-1303	Lock screw
	12	G1312-60061	Purge valve 1260
	13	0515-2118	Pump head screw (M5, 60 mm)
		G1398A	Active Seal Wash Option Upgrade (includes service)
	14	5067-4793	Peristaltic Pump with Fixation Springs
		5065-9978	Tubing, 1 mm i.d., 3 mm o.d., silicone, 5 m, for seal wash option
		01018-23702	Insert tool

The Pump head assembly with seal wash (G1312-60045) includes items 1-8, 11 and 13.

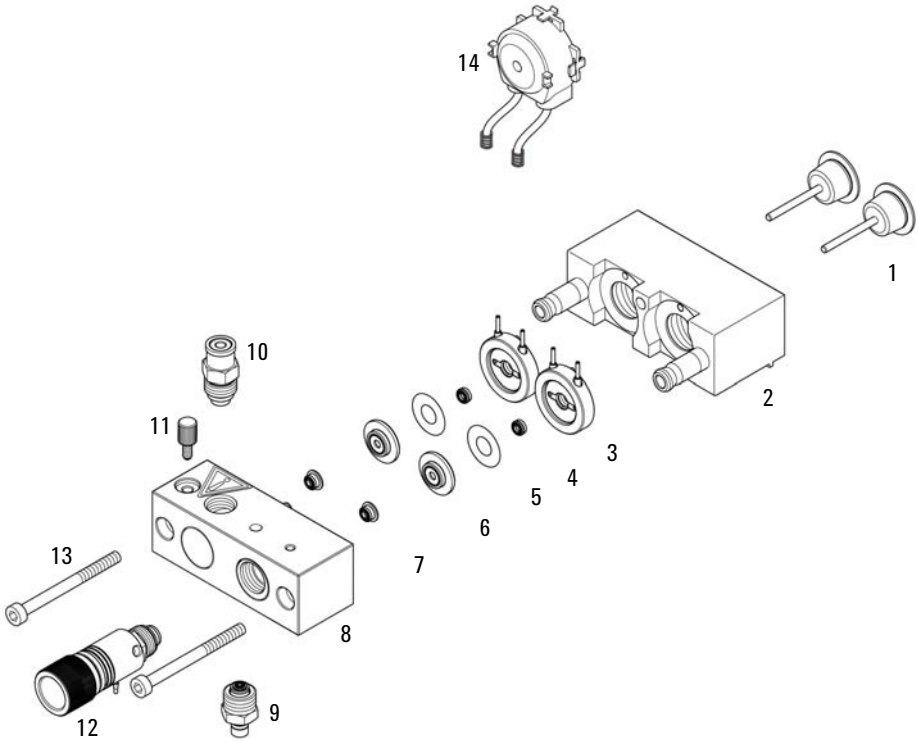

Figure 18 Pump Head with Seal Wash Option

Outlet Valve

p/n	Description
G1312-60067	Outlet valve 1220/1260

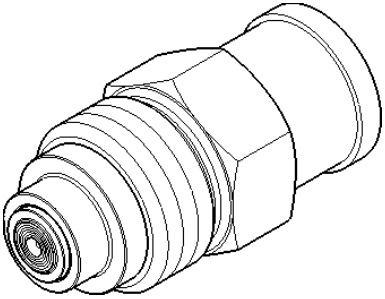

Figure 19 Outlet Valve

Purge Valve Assembly

Item	p/n	Description
1	G1312-60061	Purge valve 1260
2	01018-22707	PTFE frits (pack of 5)
3	5067-4728	Seal cap

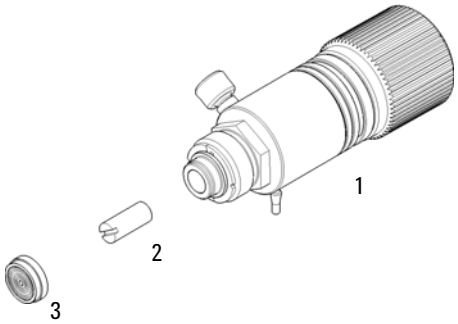

Figure 20 Purge Valve Assembly

Active Inlet Valve Assembly

Item	p/n	Description
	G5699A	Active Inlet Valve Upgrade Kit includes service and the parts listed below
1	G1312-60025	Active inlet valve body, without cartridge
2	G1312-60020	Cartridge for active inlet valve 600 bar
	G1311-67304	Connecting tube, MCGV to AIV (needed for quaternary pump only)
	0100-2298	Adapter, PEEK int. 1/4-28 to ext. 10-32 (needed for isocratic pump only)

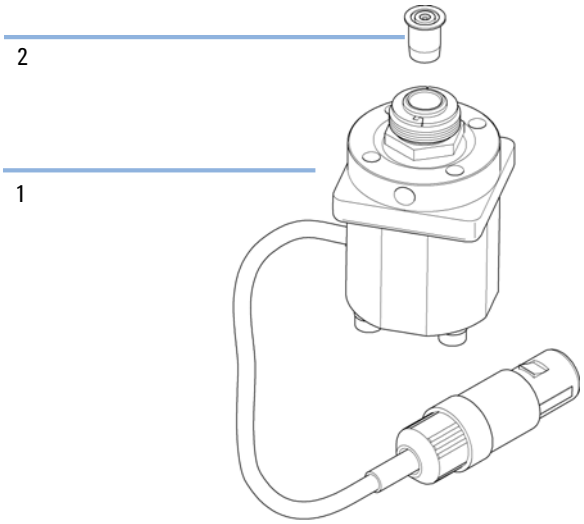

Figure 21 Active Inlet Valve Assembly

HPLC Starter Kit G4201-68707

HPLC Starter Kit incl. 0.17 mm i.d. cap (G4201-68707)

p/n	Description
9301-1420 (3x)	Solvent bottle, transparent
9301-1450	Solvent bottle, amber
01018-22707	PTFE frits (pack of 5)
5182-0716	Screw Cap Vial, 2 mL, amber glass, write-on spot, 100/pk
5182-0717	Blue screw caps 100/pk
5063-6507 (2x)	Chip, Column I.D. Assy
5041-2168 (2x)	Solvent inlet filter, 20 µm pore size
5065-9939	Capillary/Fitting Starter Kit 0.17 mm id

HPLC Starter Kit G4202-68707

HPLC Starter Kit incl. 0.12 mm i.d. cap (G4202-68707)

p/n	Description
9301-1420 (3x)	Solvent bottle, transparent
9301-1450	Solvent bottle, amber
01018-22707	PTFE frits (pack of 5)
5182-0716	Screw Cap Vial, 2 mL, amber glass, write-on spot, 100/pk
5182-0717	Blue screw caps 100/pk
5063-6507 (2x)	Chip, Column I.D. Assy
5041-2168 (2x)	Solvent inlet filter, 20 µm pore size
G1316-80003	Heater long-down (0.12 mm i.d., 1.6 µL internal volume)
5065-9937	Capillary/Fitting Starter Kit 0.12 mm id

HPLC System Tool Kit

The HPLC System Tool Kit (G4203-68708) contains some accessories and tools needed for installation and repair of the module.

p/n	Description
0100-1681	Adapter syringe/seal wash tube
0100-1710	Mounting Tool for Tubing Connections
01018-23702	Insert tool
5023-0240	Hex driver, ¼", slitted
8710-0060	Hex-key wrench, 9/64 inch
8710-0510 (2x)	Wrench open 1/4 — 5/16 inch
8710-0641	Hex key set 1 – 5 mm
8710-0899	Pozidriv screwdriver
8710-1534	Wrench, 4 mm both ends, open end
8710-1924	Wrench open 14 mm
8710-2392	Hex key 4 mm15 cm long T-handle
8710-2393	Hex key 1.5 mm, straight handle 10 cm
8710-2394	Hex key 9/64 inch 15 cm long T-handle
8710-2409	Wrench open end, 5/16 – 3/8 inch
8710-2411	Hex key 3 mm12 cm long
8710-2412	Hex key 2.5 mm, 15 cm long, straight handle
8710-2438	Hex key 2.0 mm
8710-2509	Screwdriver Torx TX8
8710-2594	Double open end wrench 4 mm
9301-0411	Syringe, Plastic
9301-1337	Adapter syringe/solvent tube with fitting

Solvent Cabinet

Item	p/n	Description
1	5067-4770	Solvent Cabinet Kit
2	5043-0207	Name plate 1260
3	5065-9954	Front panel, solvent cabinet
4	5042-8907	Leak panel
5	9301-1420	Solvent bottle, transparent
6	9301-1450	Solvent bottle, amber
7	G1311-60003	Bottle-head assembly

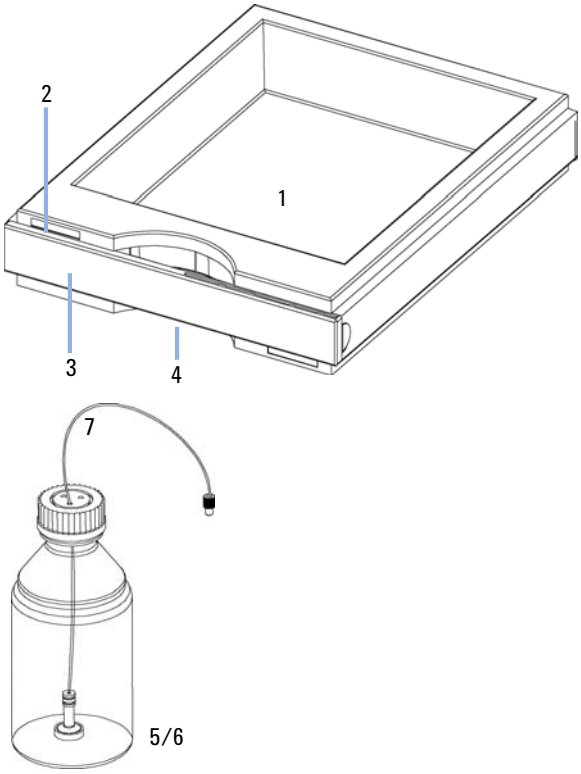

Figure 22 Solvent Cabinet Parts

Bottle Head Assembly

Item	p/n	Description
	G1311-60003	Bottle-head assembly
1	5063-6598	Ferrules with lock ring (10/Pk)
2	5063-6599	Tube screw (10/Pk)
3		Wire marker
4	5062-2483	Solvent tubing, 5 m
5	5062-8517	Inlet filter adapter (4/Pk)
6	5041-2168	Solvent inlet filter, 20 µm pore size

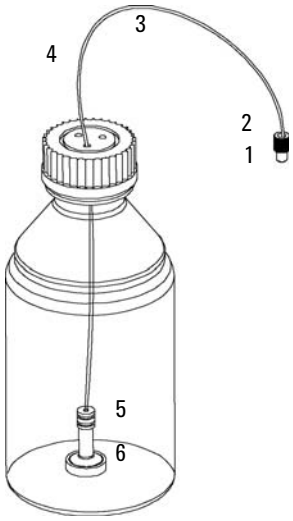

Figure 23 Bottle-Head Assembly Parts

Hydraulic Path of the Quaternary Pump

Item		p/n	Description
	1	G1312-67305	Outlet capillary, pump to injector
OR	1	G1329-87300	Outlet capillary, pump to thermostattable autosampler
		G1311-60003	Bottle-head assembly
	2	G1322-67300	Kit of 4 solvent tubes including labels for connection degasser to MCGV
	3	G1311-81600	Capillary, damper to inlet pump chamber 2
	4	G1311-81601	Capillary, outlet valve 1 to damper
	5	5067-5378	Connecting tube, MCGV to PIV
OR	5	G1311-67304	Connecting tube, MCGV to AIV
	6	5062-2461	Waste tube, 5 m (reorder pack)
		0100-1847	PEEK adapter 1/4-28 to 10-32 (Adapter AIV to solvent inlet tubes)
		G1311-60006	Inline filter (OPTIONAL)

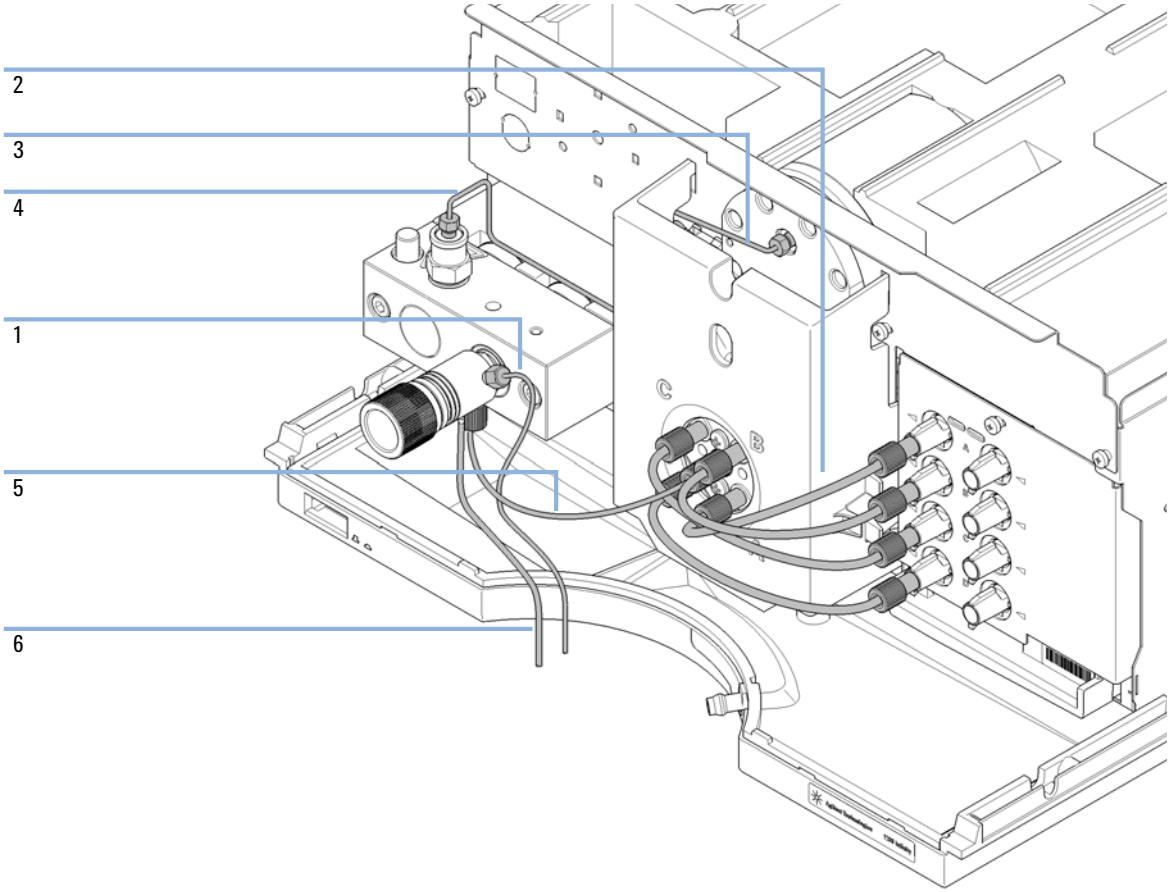

Figure 24 Hydraulic Flow Path of the Quaternary Pump

Hydraulic Path of the Isocratic Pump

Item	p/n	Description
1	G1311-81600	Capillary, damper to inlet pump chamber 2
2	G1311-81601	Capillary, outlet valve 1 to damper
	G1311-60003	Bottle-head assembly
3	G1312-67305	Outlet capillary, pump to injector
	G1329-87300	Outlet capillary, pump to thermostattable autosampler
4	5062-2461	Waste tube, 5 m (reorder pack)
	0100-1847	PEEK adapter 1/4-28 to 10-32 (OPTIONAL) (Adapter AIV to solvent inlet tubes) (OPTIONAL)

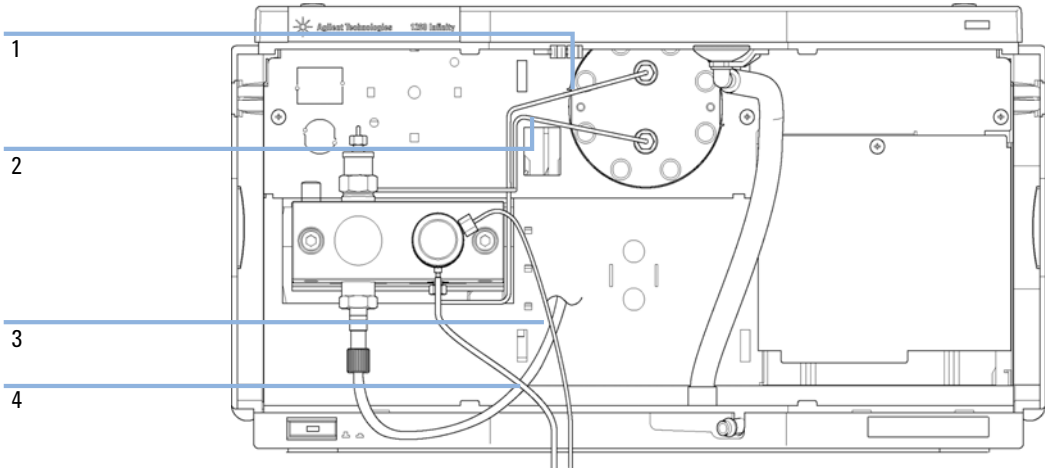

Figure 25 Hydraulic flow path of the isocratic pump

11
Identifying Cables

This chapter provides information on cables used with the Agilent 1200 Infinity Series modules.

Cable Overview

NOTE Never use cables other than the ones supplied by Agilent Technologies to ensure proper functionality and compliance with safety or EMC regulations.

Analog cables

p/n	Description
35900-60750	Agilent module to 3394/6 integrators
35900-60750	Agilent 35900A A/D converter
01046-60105	Analog cable (BNC to general purpose, spade lugs)

Remote cables

p/n	Description
03394-60600	Agilent module to 3396A Series I integrators
	3396 Series II / 3395A integrator, see details in section "Remote Cables" on page 192
03396-61010	Agilent module to 3396 Series III / 3395B integrators
5061-3378	Remote Cable
01046-60201	Agilent module to general purpose

BCD cables

p/n	Description
03396-60560	Agilent module to 3396 integrators
G1351-81600	Agilent module to general purpose

CAN cables

p/n	Description
5181-1516	CAN cable, Agilent module to module, 0.5 m
5181-1519	CAN cable, Agilent module to module, 1 m

LAN cables

p/n	Description
5023-0203	Cross-over network cable, shielded, 3 m (for point to point connection)
5023-0202	Twisted pair network cable, shielded, 7 m (for point to point connection)

External Contact Cable

p/n	Description
G1103-61611	External contact cable - Agilent module interface board to general purposes

RS-232 cables

p/n	Description
G1530-60600	RS-232 cable, 2 m
RS232-61601	RS-232 cable, 2.5 m Instrument to PC, 9-to-9 pin (female). This cable has special pin-out, and is not compatible with connecting printers and plotters. It's also called "Null Modem Cable" with full handshaking where the wiring is made between pins 1-1, 2-3, 3-2, 4-6, 5-5, 6-4, 7-8, 8-7, 9-9.
5181-1561	RS-232 cable, 8 m

Analog Cables

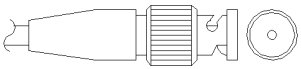

One end of these cables provides a BNC connector to be connected to Agilent modules. The other end depends on the instrument to which connection is being made.

Agilent Module to 3394/6 Integrators

p/n 35900-60750	Pin 3394/6	Pin Agilent module	Signal Name
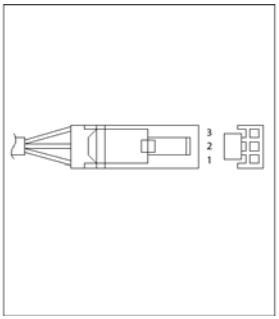	1		Not connected
	2	Shield	Analog -
	3	Center	Analog +

Agilent Module to BNC Connector

p/n 8120-1840	Pin BNC	Pin Agilent module	Signal Name
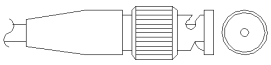	Shield	Shield	Analog -
	Center	Center	Analog +

Agilent Module to General Purpose

p/n 01046-60105	Pin	Pin Agilent module	Signal Name
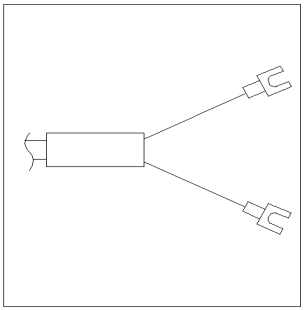	1		Not connected
	2	Black	Analog -
	3	Red	Analog +

Remote Cables

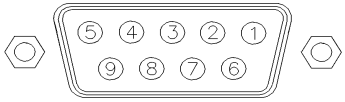

One end of these cables provides a Agilent Technologies APG (Analytical Products Group) remote connector to be connected to Agilent modules. The other end depends on the instrument to be connected to.

Agilent Module to 3396A Integrators

p/n 03394-60600	Pin 3396A	Pin Agilent module	Signal Name	Active (TTL)
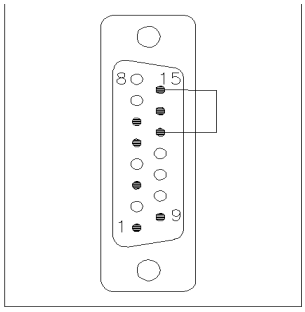	9	1 - White	Digital ground	
	NC	2 - Brown	Prepare run	Low
	3	3 - Gray	Start	Low
	NC	4 - Blue	Shut down	Low
	NC	5 - Pink	Not connected	
	NC	6 - Yellow	Power on	High
	5,14	7 - Red	Ready	High
	1	8 - Green	Stop	Low
	NC	9 - Black	Start request	Low
	13, 15		Not connected	

Agilent Module to 3396 Series II / 3395A Integrators

Use the cable Agilent module to 3396A Series I integrators (03394-60600) and cut pin #5 on the integrator side. Otherwise the integrator prints START; not ready.

Agilent Module to 3396 Series III / 3395B Integrators

p/n 03396-61010	Pin 33XX	Pin Agilent module	Signal Name	Active (TTL)
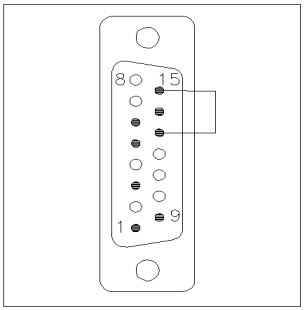	9	1 - White	Digital ground	
	NC	2 - Brown	Prepare run	Low
	3	3 - Gray	Start	Low
	NC	4 - Blue	Shut down	Low
	NC	5 - Pink	Not connected	
	NC	6 - Yellow	Power on	High
	14	7 - Red	Ready	High
	4	8 - Green	Stop	Low
	NC	9 - Black	Start request	Low
	13, 15		Not connected	

Agilent Module to Agilent 35900 A/D Converters

p/n 5061-3378	Pin 35900 A/D	Pin Agilent module	Signal Name	Active (TTL)
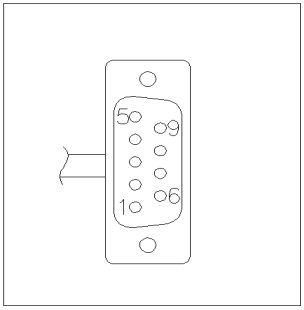	1 - White	1 - White	Digital ground	
	2 - Brown	2 - Brown	Prepare run	Low
	3 - Gray	3 - Gray	Start	Low
	4 - Blue	4 - Blue	Shut down	Low
	5 - Pink	5 - Pink	Not connected	
	6 - Yellow	6 - Yellow	Power on	High
	7 - Red	7 - Red	Ready	High
	8 - Green	8 - Green	Stop	Low
	9 - Black	9 - Black	Start request	Low

Agilent Module to General Purpose

p/n 01046-60201	Wire Color	Pin Agilent module	Signal Name	Active (TTL)
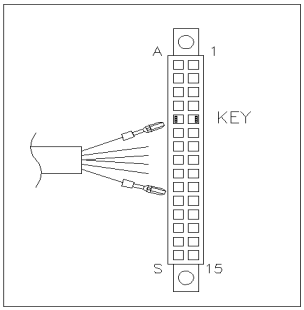	White	1	Digital ground	
	Brown	2	Prepare run	Low
	Gray	3	Start	Low
	Blue	4	Shut down	Low
	Pink	5	Not connected	
	Yellow	6	Power on	High
	Red	7	Ready	High
	Green	8	Stop	Low
	Black	9	Start request	Low

BCD Cables

One end of these cables provides a 15-pin BCD connector to be connected to the Agilent modules. The other end depends on the instrument to be connected to

Agilent Module to General Purpose

p/n G1351-81600	Wire Color	Pin Agilent module	Signal Name	BCD Digit
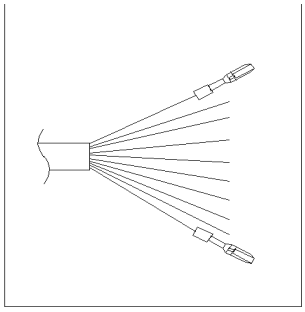	Green	1	BCD 5	20
	Violet	2	BCD 7	80
	Blue	3	BCD 6	40
	Yellow	4	BCD 4	10
	Black	5	BCD 0	1
	Orange	6	BCD 3	8
	Red	7	BCD 2	4
	Brown	8	BCD 1	2
	Gray	9	Digital ground	Gray
	Gray/pink	10	BCD 11	800
	Red/blue	11	BCD 10	400
	White/green	12	BCD 9	200
	Brown/green	13	BCD 8	100
	not connected	14		
	not connected	15	+ 5 V	Low

Agilent Module to 3396 Integrators

p/n 03396-60560	Pin 3396	Pin Agilent module	Signal Name	BCD Digit
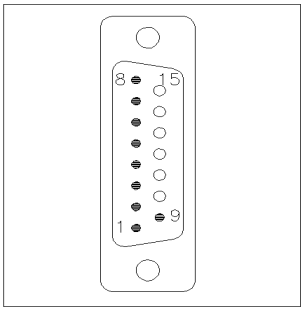	1	1	BCD 5	20
	2	2	BCD 7	80
	3	3	BCD 6	40
	4	4	BCD 4	10
	5	5	BCD0	1
	6	6	BCD 3	8
	7	7	BCD 2	4
	8	8	BCD 1	2
	9	9	Digital ground	
	NC	15	+ 5 V	Low

CAN Cable

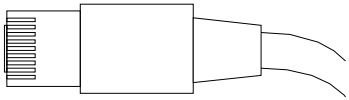

Both ends of this cable provide a modular plug to be connected to Agilent modules CAN or LAN connectors.

CAN Cables

p/n	Description
5181-1516	CAN cable, Agilent module to module, 0.5 m
5181-1519	CAN cable, Agilent module to module, 1 m

LAN Cables

p/n	Description
5023-0203	Cross-over network cable, shielded, 3 m (for point to point connection)
5023-0202	Twisted pair network cable, shielded, 7 m (for point to point connection)

External Contact Cable

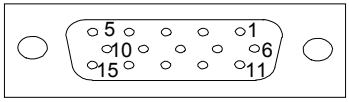

One end of this cable provides a 15-pin plug to be connected to Agilent modules interface board. The other end is for general purpose.

Agilent Module Interface Board to general purposes

p/n G1103-61611	Color	Pin Agilent module	Signal Name
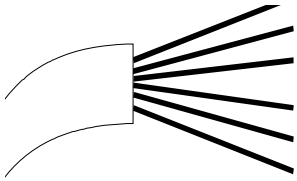	White	1	EXT 1
	Brown	2	EXT 1
	Green	3	EXT 2
	Yellow	4	EXT 2
	Grey	5	EXT 3
	Pink	6	EXT 3
	Blue	7	EXT 4
	Red	8	EXT 4
	Black	9	Not connected
	Violet	10	Not connected
	Grey/pink	11	Not connected
	Red/blue	12	Not connected
	White/green	13	Not connected
	Brown/green	14	Not connected
	White/yellow	15	Not connected

Agilent Module to PC

p/n	Description
G1530-60600	RS-232 cable, 2 m
RS232-61601	RS-232 cable, 2.5 m Instrument to PC, 9-to-9 pin (female). This cable has special pin-out, and is not compatible with connecting printers and plotters. It's also called "Null Modem Cable" with full handshaking where the wiring is made between pins 1-1, 2-3, 3-2, 4-6, 5-5, 6-4, 7-8, 8-7, 9-9.
5181-1561	RS-232 cable, 8 m

Agilent 1200 Module to Printer

p/n	Description
5181-1529	Cable Printer Serial & Parallel, is a SUB-D 9 pin female vs. Centronics connector on the other end (NOT FOR FW UPDATE). For use with G1323 Control Module.